LED High Bay Light

Check whether it concerns an AC(Alternating Current)based or DC(Direct Current) based system

⚠ Caution:
Switch Off the Power Supply

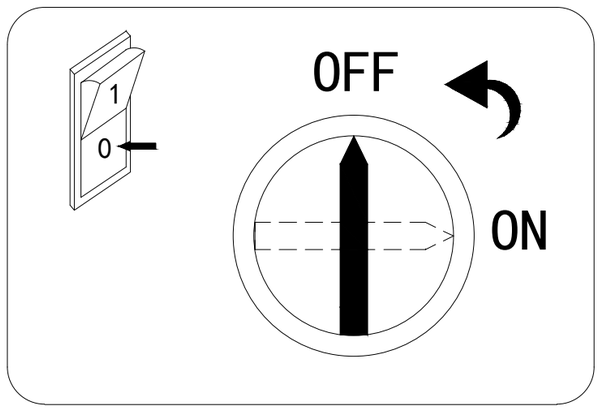

New Installation

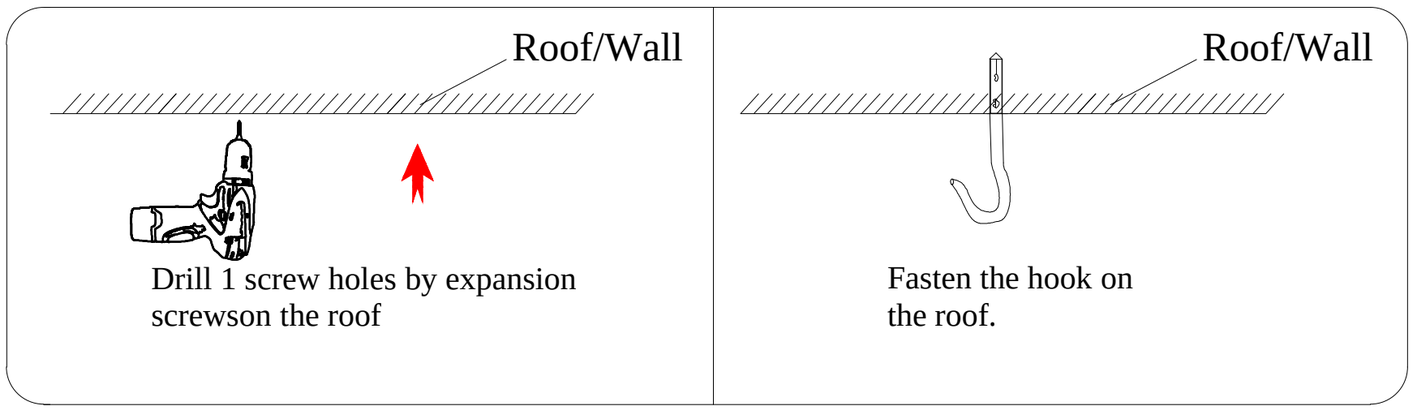

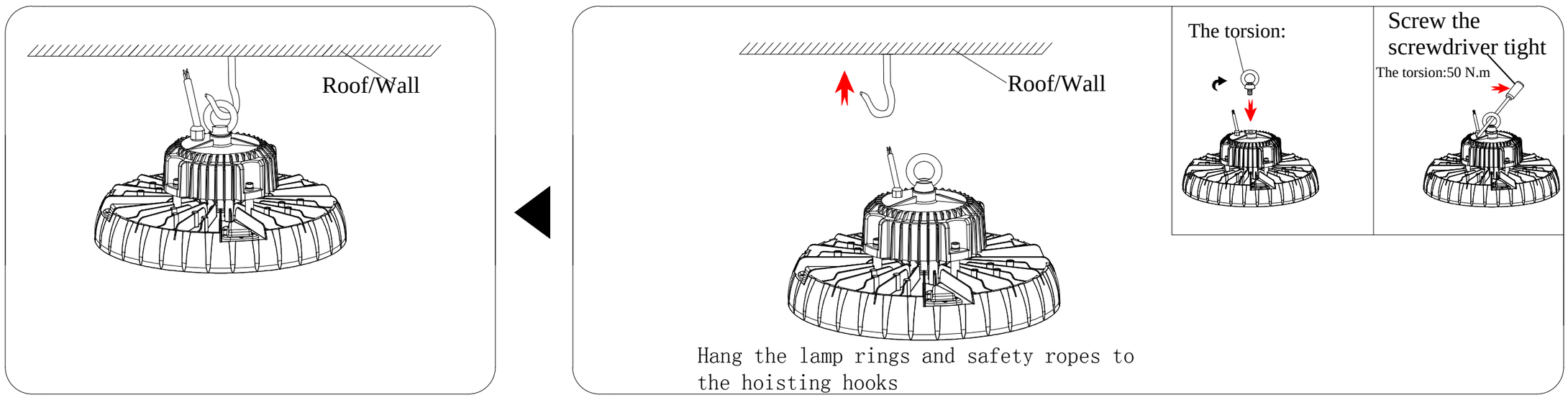

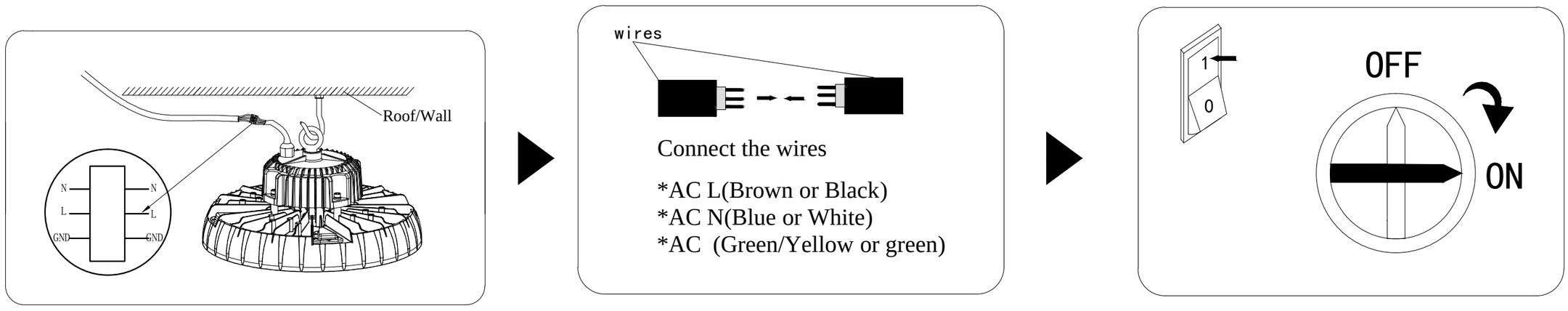

1. To protect the surface of the fixture from scratch, please handle the package with care during the transportation and storage. Do not place heavy item above the package;
2. Do not let the product surface friction with other hard objects or fall on the floor;
3. Make sure the fixture is securely mounted. The connection of all the wires must have insulation protection;
4. The appropriate waterproof measurements are requried when connecting the driver externally;
5. Please check the operating voltage range before installation, do not use the luminaire out of the working voltage range.
6. If dimming function needed, pl of the working voltage range.ease un-seal the dimmable cord and wire them to dimmer/sensor