200+ Patent Certificates
$1,000,000+ Annual Energy Saving
20,000+ Projects Successfully Installed

Quality, Honesty, Service and Innovation

S (standard) Version

IL02 LED Street Light

Suitable for European Street

Power: 20W - 300W

Annual Replaced 150,000+ units Street Lighting

PROFESSIONAL TRUST WORTHINESS

Innovative & Tailored
Lighting Solutions for **Success**
www.aokledlight.com

Features of **IL02** Series

For others & details
please request

< IL02 (80W-120W/130W-180W/200W-230W/300W)

< IL02s (20W-70W)

< IL02 (20W-70W)

WARRANTY

5 Year Limited Warranty,
10 Year Preferred Warranty.
Please consult with our sales for detailed agreement.

The IL02 series is designed for European street lighting needs, featuring precision-engineered lenses made from optical-grade polycarbonate to maximize light intensity. Its micro-lens systems create IESNA Type II, III, and IV distributions, ensuring 0% total lumens above 90 ° (BUG Rating, U=0). This minimizes glare and provides a wider, smoother, and more uniform light output for enhanced visual comfort.

- Heavy-duty die-cast aluminum housing, UV stabilized polyester powder paint;
- 10KV~20KV surge protection;
- PC lens + tempered glass;
- Buckle design, easy maintenance;
- Fin shape radiator, better heat dissipation;
- Optical systems maintain an IP66 rating;

Benefits for choosing IL02

- **Auto Cut-off**
  Avoid damage to electrical equipment and protect personal safety.
- **Convenient Upgrade**
  Reserve sensor installation port and smart control ready for easy upgrading.
- **Efficient Heat Dissipation**
  Rear fin-shaped heat sink design, fast convection, excellent heat dissipation, low temperature.
- **Toolless Entry**
  Toolless opening and replacement of components for maintenance
- **Exceptional Impact Resistance**
  Polycarbonate lens with 4mm thick tempered glass for IK08 impact rating and 3G shake-proof.
- **Professional Optic Design**
  Multiple light distribution options available, professional simulation design.
- **Environmental Concept**
  ULOR=0, No Uplight Pollution.
- **Multiple Accessories and Options**
  Supports accessories and options such as Photocell (Nema), 3pin/7pin bases, ZigBee, LoRa, Dali, Casambi, NB-IoT control, and more.

wally@aokledlight.com
+1 626-986-4050 (US)
+86 755 2357 9148 (CN)
@2026 AOK Industrial Company Limited. All Right Reserved.

Quality, Honesty, Service and Innovation

Ingenious Design
For the sake of adaptability

The streamlined design of IL02 series street lights improves wind resistance.
Its user-friendly maintenance and replacement design cut fixture maintenance costs, reducing both personnel and financial investments significantly.

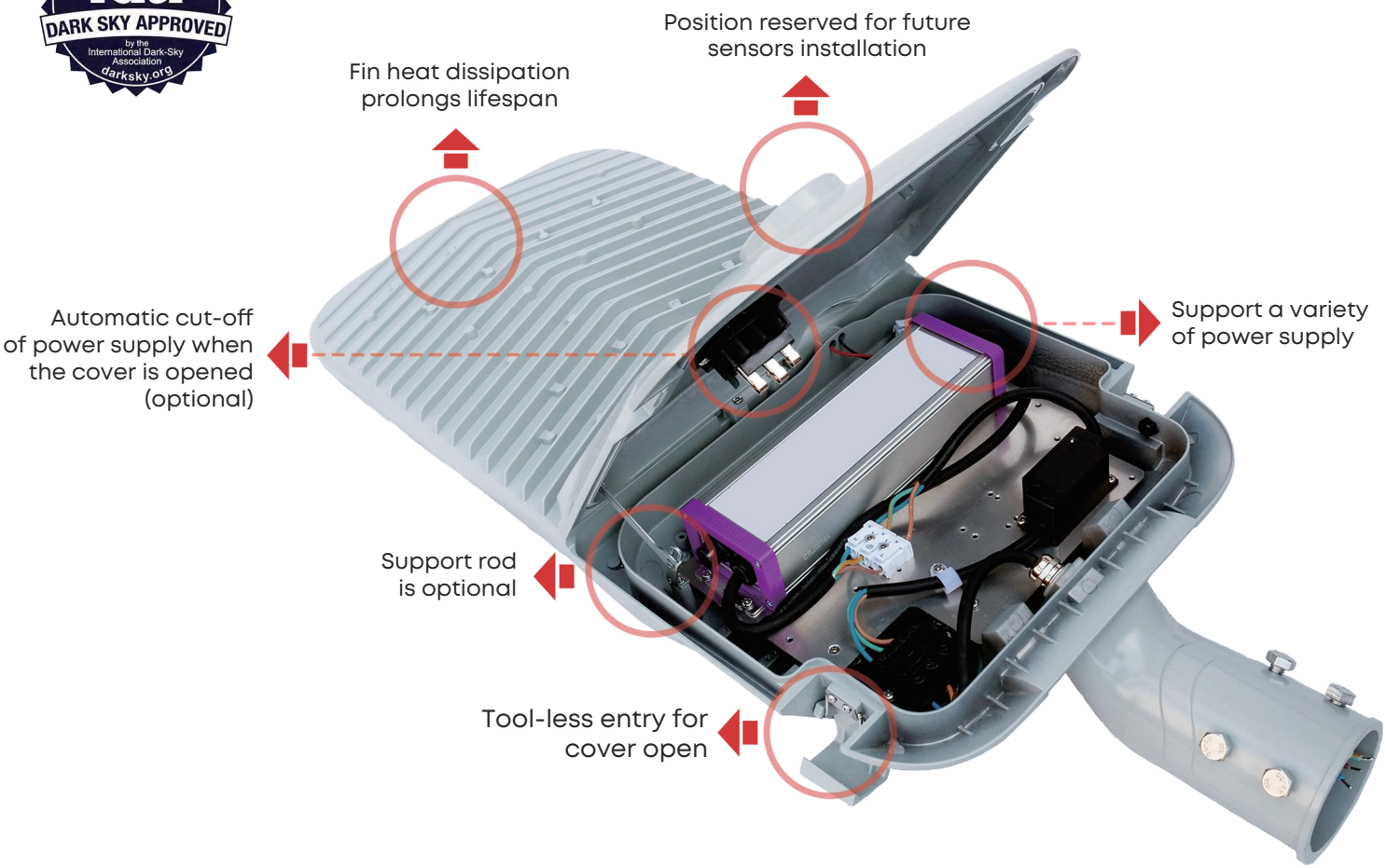

· Dual-layer structure design, enhanced water resistance.

· High quality silicone gasket, improved sealing performance.

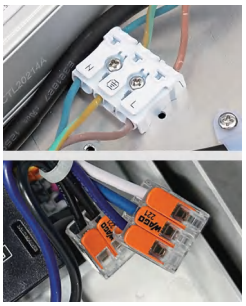

· High-quality terminal wiring ensures reliability and safety. (Optional)

· High-quality AC power interface, safe and reliable. (Optional)

· Adjustable bracket ±15 degrees.

· Reinforced bracket design, increased safety.

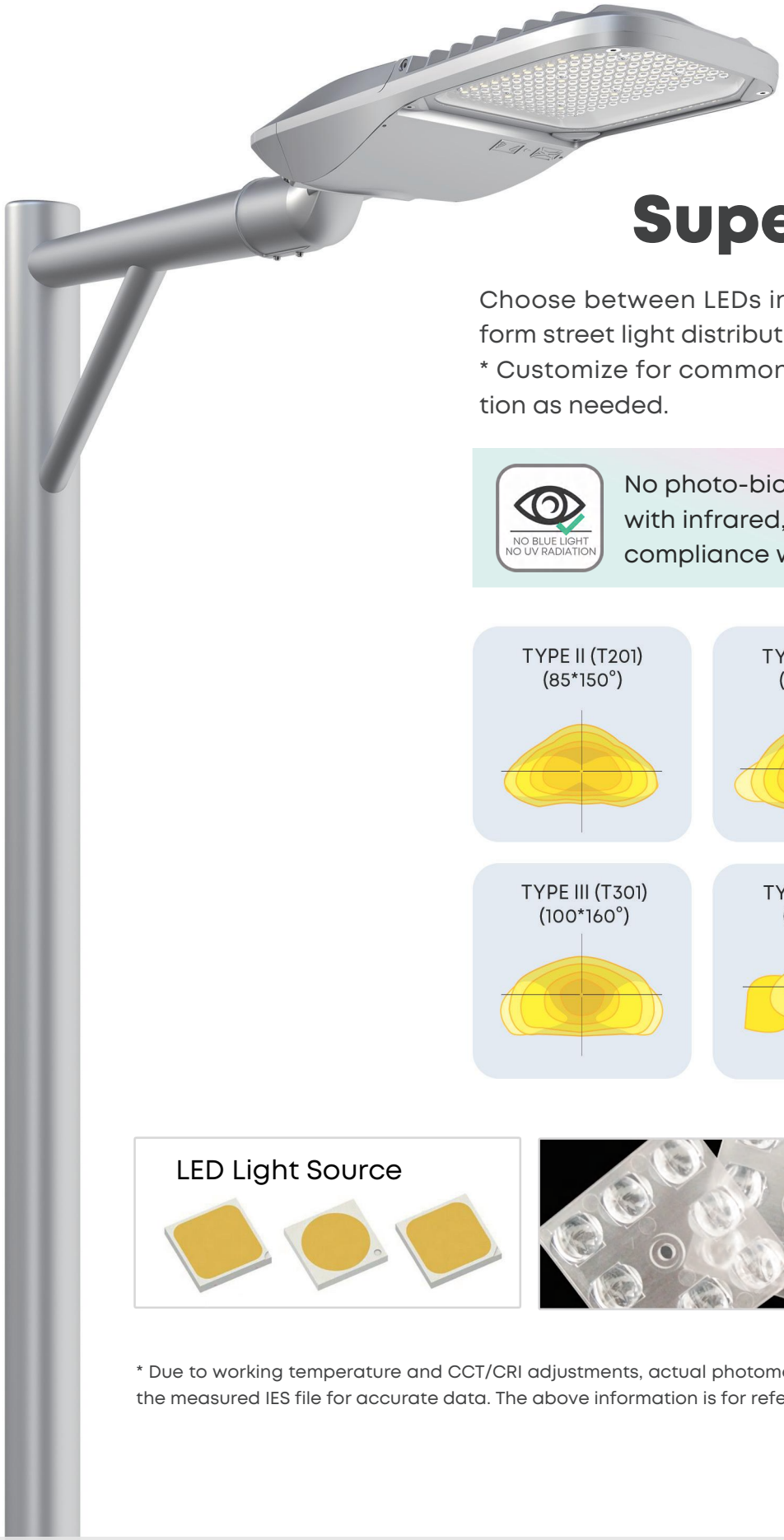

Superior

Animals & Insects Friendly
2200K-2700K
CCT available

Choose between LEDs in 3030 or 5050 solutions for uniform street light distribution.
* Customize for common or private mode light distribution as needed.

NO BLUE LIGHT
NO UV RADIATION

No photo-biological risk (no risk associated with infrared, blue light, or UV radiation), in compliance with **EN 62471:2008**.

TYPE II (T201)
(85*150°)

TYPE II (T211)
(110*155°)

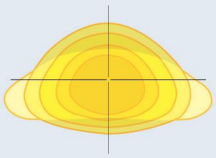

TYPE II (T221)
(75*150°)

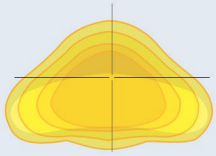

TYPE III (T301)
(100*160°)

TYPE III (T311)
(90*150°)

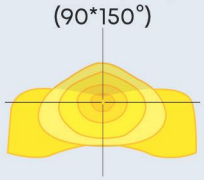

TYPE III (T321)
(100*145°)

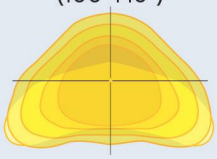

LED Light Source

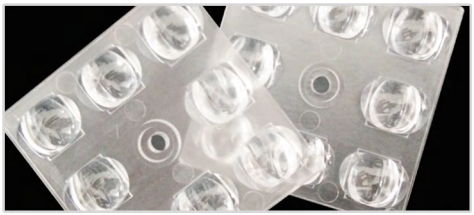

TYPE IV (T411)
(115*145°)

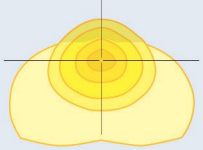

* Due to working temperature and CCT/CRI adjustments, actual photometric values may vary slightly. Please consult the measured IES file for accurate data. The above information is for reference purposes only.

Smart Control Ready
For Efficient Management

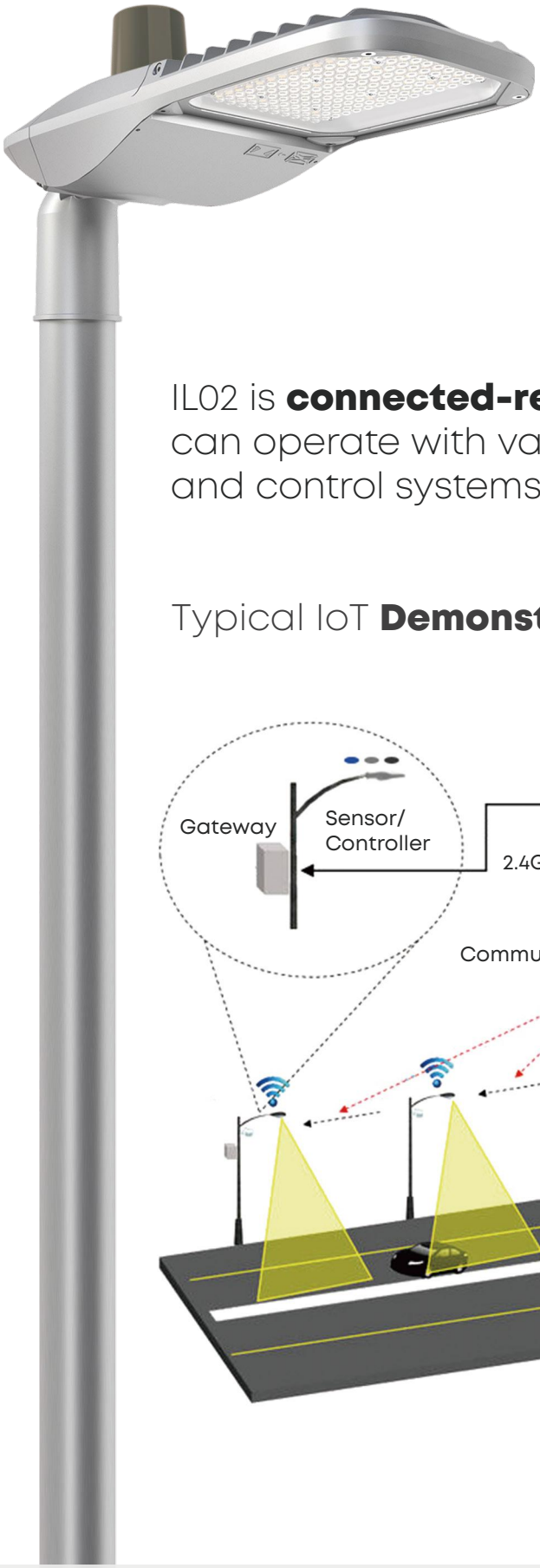

IL02 is **connected-ready** and can operate with various sensors and control systems.

Typical IoT **Demonstration**

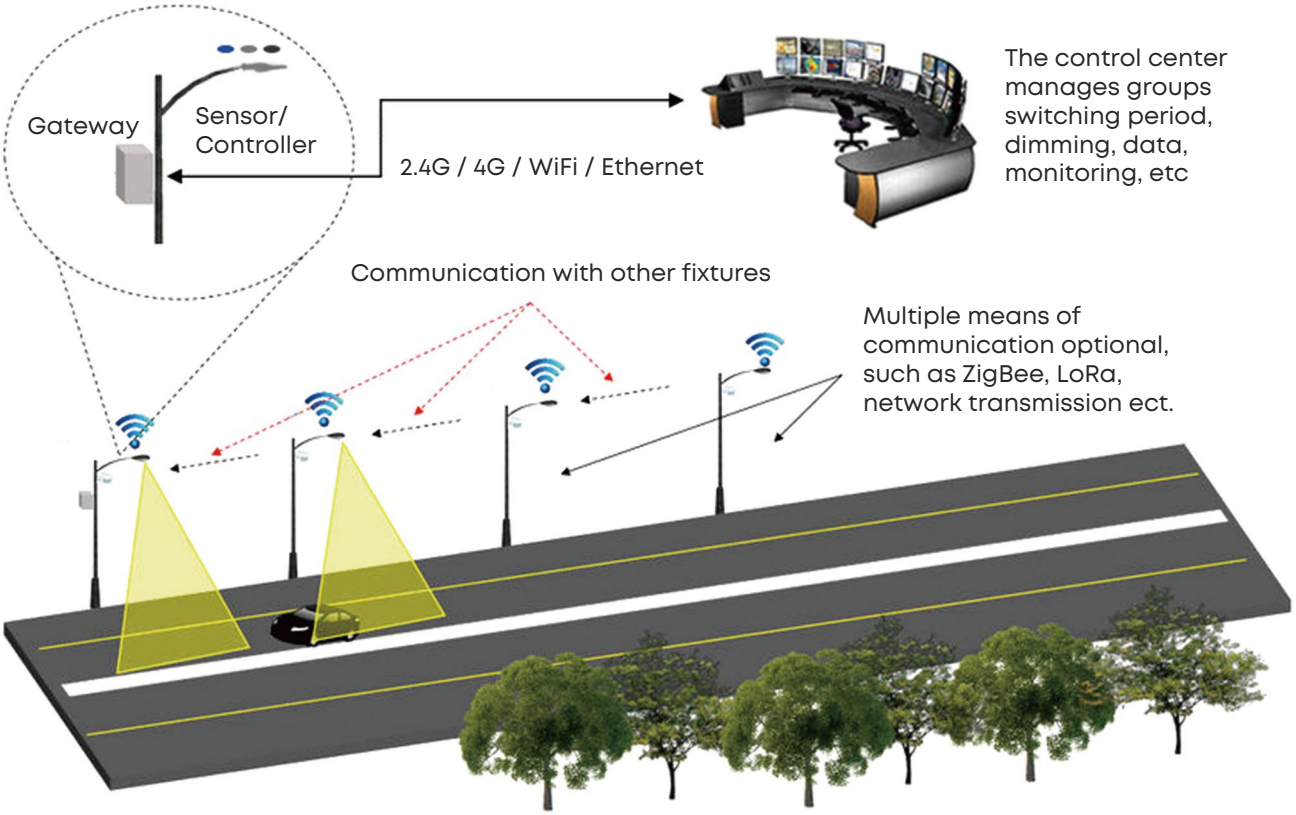

Smart Lighting Control Ready

Custom Dimming Profile

Smart luminaire drivers enable the programming of complex dimming profiles without extra wiring. Customized time intervals and light levels contribute to maximum energy savings, maintaining required lighting levels and uniformity throughout the night.

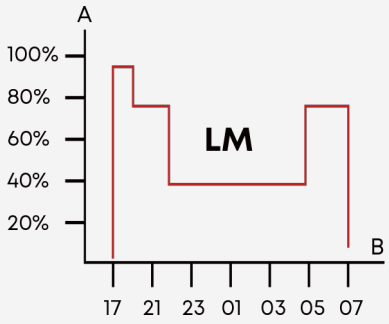

Daylight Sensor / Photocell

Photocell or daylight sensors switch the luminaire on as soon natural light falls to a certain level. It can be programmed to switch on during a storm, on a cloudy day (in critical areas) or only at nightfall so as to provide safety and comfort in public spaces.

Smart standards. Smarter lighting.

LoRaWAN® Luminaire Controller Zhaga is a wireless device for remote LED luminaire control with a Zhaga-compliant connector and DALI interface. It's compatible with LoRaWAN®, NB-IoT, and LTE-M networks, featuring a modern, compact design suitable for various street lighting modules.

LoRaWAN® Luminaire Controller NEMA is designed for LED luminaires with an ANSI C136.41 NEMA receptacle. It controls the luminaire through DALI or 0-10V analog interfaces and provides a secure power connection with three robust twist lock contacts.

Outdoor Luminaire with Zhaga Receptacles (optional)

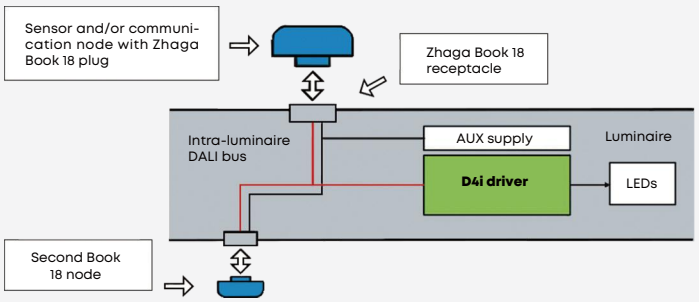

Casambi Ready (optional)

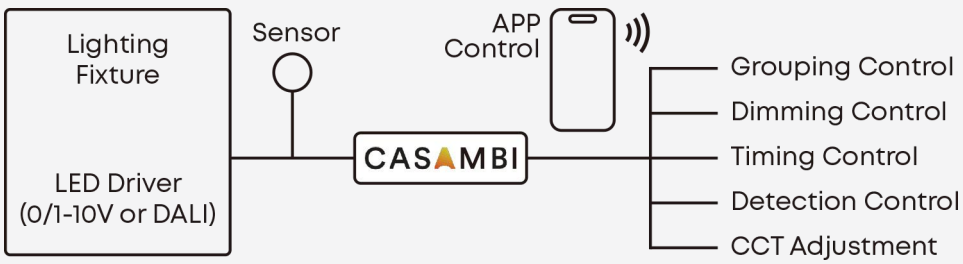

Application Reference

- Road & highway lighting
- Urban road & street lighting
- Residential area ligthing
- Parks & perimeter lighting
- Parking lot lighting
- Riverside & jogging track

Comparison of Project Remodeling

[**Over 5,000,000+ Luminaires**
Installed Worldwide]

Parameter Table

Electrical Data							
Model		**AOK-20WiL02S**	**AOK-30WiL02S**	**AOK-40WiL02S**	**AOK-50WiL02S**	**AOK-60WiL02S**	**AOK-70WiL02S**
Input Voltage		100-277VAC					
THD（220Vac）		≤10%					
PF(220Vac)		≥0.95					
Driver		Inventronics / Sosen /Class 1 .OSRAM/Philips/MOSO Class 1/ Class 2, EU					
Operating Temperature		-40°C to 55°C (-40 °F to 131 °F)					
Control Option		DALI, 1-10V/ PWM / timer dimming, Nema, Presence detection sensor. Dim-to-Off with standby power <= 0.5W.					
Surge Protection		10kV / 20kV optional					
Photometric Data							
Efficacy(lm/W) (CRI 70Ra, 5000K) (Std Dev ±5%)	T201-12in1 (85*150°)	150lm/W	141lm/W	150lm/W	145lm/W	141lm/W	134lm/W
	T211-12in1 (110*155°)	150lm/W	141lm/W	150lm/W	145lm/W	141lm/W	134lm/W
	T221-16in1 (75*150°)	154lm/W	148lm/W	154lm/W	151lm/W	148lm/W	139lm/W
	T301-12in1 (100*160°)	145lm/W	136lm/W	145lm/W	140lm/W	136lm/W	130lm/W
	T311-12in1 (90*150°)	150lm/W	141lm/W	150lm/W	145lm/W	141lm/W	134lm/W
	T321-16in1 (100*145°)	154lm/W	148lm/W	154lm/W	151lm/W	148lm/W	139lm/W
	T411-12in1 (115*145°)	150lm/W	141lm/W	150lm/W	145lm/W	141lm/W	134lm/W
	T2/T3/T5@A5050	190lm/W	185lm/W	190lm/W	187lm/W	185lm/W	182lm/W
Luminous flux (lm) (CRI 70Ra, 5000K) (Std Dev ±5%)	T201-12in1 (85*150°)	3000lm	4230lm	6000lm	7250lm	8460lm	9380lm
	T211-12in1 (110*155°)	3000lm	4230lm	6000lm	7250lm	8460lm	9380lm
	T221-16in1 (75*150°)	3080lm	4440lm	6160lm	7550lm	8880lm	9730lm
	T301-12in1 (100*160°)	2900lm	4080lm	5800lm	7000lm	8160lm	9380lm
	T311-12in1 (90*150°)	3000lm	4230lm	6000lm	7250lm	8460lm	9100lm
	T321-16in1 (100*145°)	3080lm	4440lm	6160lm	7550lm	8880lm	9730lm
	T411-12in1 (115*145°)	3000lm	4230lm	6000lm	7250lm	8460lm	9380lm
	T2/T3/T5@A5050	3800lm	5550lm	7600lm	9350lm	11100lm	12740lm
ULR		= 0%, @ Luminaire inclination 0°					
CCT		2700K, 3000K, 4000K, 5000K, 5700K, 6500K					
CRI		70Ra, 80Ra, 90Ra optional					
Beam Angle		Type-II (85*150°, 110*155°, 75*150°) / Type III (100*160°, 90*150°, 100*145°) / Type IV (115*145°)					
LED Manufacturer		LUMILEDS/Seoul/Others					
LED Model		Lumileds 3030, 5050 / Seoul 3030, 5050 / A5050					
Lens		Polycarbonate+tempered glass(4 mm thick)					
Mechanical Data							
IP/IK		IP66/IK08, according to standard EN 60529 and EN 62262					
Vibration Resistance		3G, conform to standard IEC 68-2-6.					
SCx		Front: 0.0152 m²; Side: 0.0272 m²					
Materials		Heavy-duty die-cast aluminum (EN AC-46100)					
Painting		Black, Silver, Gray,Customized color					
Surface Treatment		Anti-UV thermosetting polyester / 80 micron epoxy primer + Anti-UV thermosetting polyester (for extremely corrosive environments).					
Cable		Pre-wired with a roughly 50 cm cable (Other lengths on request）					
Mounting		Side Entry/Post Top					
Others							
Lifespan		L70 > 100000hrs, @Ta 25°C					
Warranty		5 years in standard, 10 years optional					
Certification		ENEC,CE,CB,RoHS, For other certificates please request					
Product Size		512*179*118mm / 20.2*7.0*4.6 inches					
Carton Size		570*230*170mm / 22.4*9.1*6.7 inches					
Net Weight		2.9kg / 6.39 lbs					
Gross Weight		3.7kg / 8.16 lbs					
Recommend Installation Height		General 4-12m, based on actual project requirements					
Accessories(standard)		Circuit breaker, 10KV SPD, Breather vent					
Accessories(optional)		Photocell (with Nema socket)					
Application Field		Road & highway, urban road & street, residential area, parks, parking lot, riverside & jogging track					
Important Note!		**The provided information is solely for reference; the official measurement report holds higher authority.**					

Parameter Table

Electrical Data											
Model		**AOK-20WiL02**	**AOK-30WiL02**	**AOK-40WiL02**	**AOK-50WiL02**	**AOK-60WiL02**	**AOK-70WiL02**	**AOK-80WiL02**	**AOK-90WiL02**	**AOK-100WiL02**	**AOK-120WiL02**
Input Voltage		100-277VAC						100-277VAC			
THD（220Vac）		≤10%						≤10%			
PF(220Vac)		≥0.95						≥0.95			
Driver		Inventronics / Sosen / Philips. Class 1/ Class 2, EU									
Operating Temperature		-40°C to 55°C (-40 °F to 131 °F)									
Storage Temperature		-40°C to 80°C (-40 °F to 176 °F)									
Control Option		DALI, 1-10V/ PWM / timer dimming, Nema, Presence detection sensor. Dim-to-Off with standby power <= 0.5W.									
Surge Protection		10kV / 20kV optional									
Photometric Data											
Efficacy(lm/W) (CRI 70Ra, 5000K) (Std Dev ±5%)	T201-12in1 (85*150°)	156lm/W	155lm/W	150lm/W	148lm/W	146lm/W	144lm/W	144lm/W	143lm/W	141lm/W	137lm/W
	T211-12in1 (110*155°)	155lm/W	154lm/W	147lm/W	145lm/W	143lm/W	141lm/W	143lm/W	142lm/W	140lm/W	136lm/W
	T221-16in1 (75*150°)	158lm/W	156lm/W	154lm/W	152lm/W	150lm/W	148lm/W	154lm/W	152lm/W	150lm/W	145lm/W
	T301-12in1 (100*160°)	152lm/W	153lm/W	145lm/W	143lm/W	141lm/W	139lm/W	141lm/W	140lm/W	138lm/W	134lm/W
	T311-12in1 (90*150°)	155lm/W	154lm/W	147lm/W	145lm/W	143lm/W	141lm/W	143lm/W	142lm/W	140lm/W	136lm/W
	T321-16in1 (100*145°)	158lm/W	156lm/W	154lm/W	152lm/W	150lm/W	148lm/W	154lm/W	152lm/W	150lm/W	145lm/W
	T411-12in1 (115*145°)	155lm/W	154lm/W	147lm/W	145lm/W	143lm/W	141lm/W	143lm/W	142lm/W	140lm/W	136lm/W
	T2/T3/T5 @A5050	195lm/W	193lm/W	192lm/W	191lm/W	190lm/W	188lm/W	190lm/W	188lm/W	187lm/W	185lm/W
Luminous flux (lm) (CRI 70Ra, 5000K) (Std Dev ±5%)	T201-12in1 (85*150°)	3120lm	4650lm	6000lm	7400lm	8760lm	10080lm	11520lm	12870lm	14100lm	16440lm
	T211-12in1 (110*155°)	3100lm	4620lm	5880lm	7250lm	8580lm	9870lm	11440lm	12780lm	14000lm	16320lm
	T221-16in1 (75*150°)	3160lm	4680lm	6160lm	7600lm	9000lm	10360lm	12320lm	13680lm	15000lm	17400lm
	T301-12in1 (100*160°)	3040lm	4590lm	5800lm	7150lm	8460lm	9730lm	11280lm	12600lm	13800lm	16080lm
	T311-12in1 (90*150°)	3100lm	4620lm	5880lm	7250lm	8580lm	9870lm	11440lm	12780lm	14000lm	16320lm
	T321-16in1 (100*145°)	3160lm	4680lm	6160lm	7600lm	9000lm	10360lm	12320lm	13680lm	15000lm	17400lm
	T411-12in1 (115*145°)	3100lm	4620lm	5880lm	7250lm	8580lm	9870lm	11440lm	12780lm	14000lm	16320lm
	T2/T3/T5 @A5050	3900lm	5790lm	7680lm	9550lm	11400lm	13160lm	15200lm	16920lm	18700lm	22200lm
ULR		= 0%, @ Luminaire inclination 0°									
CCT		2700K, 3000K, 4000K, 5000K, 5700K, 6500K									
CRI		70Ra, 80Ra, 90Ra optional									
Beam Angle		Type-II (85*150°, 110*155°, 75*150°) / Type III (100*160°, 90*150°, 100*145°) / Type IV (115*145°)									
LED Manufacturer		LUMILEDS/Seoul/Others									
LED Model		Lumileds 3030, 5050 / Seoul 3030, 5050 / A5050									
Lens		Polycarbonate+tempered glass(5 mm thick)						Polycarbonate+tempered glass(4 mm thick)			
Mechanical Data											
IP/IK		IP66/IK09, according to standard EN 60529 and EN 62262						IP66/IK08, according to standard EN 60529 and EN 62262			
Vibration Resistance		3G, conform to standard IEC 68-2-6.									
SCx		Front: 0.014 m²; Side: 0.0214 m²						Front: 0.0219 m²; Side: 0.035 m²			
Materials		Heavy-duty die-cast aluminum (EN AC-46100)									
Painting		Black, Silver, Gray,Customized color									
Surface Treatment		Anti-UV thermosetting polyester / 80 micron epoxy primer + Anti-UV thermosetting polyester (for extremely corrosive environments).									
Cable		Pre-wired with a roughly 50 cm cable (Other lengths on request)									
Mounting		Side Entry						Side Entry/Post Top			
Others											
Lifespan		L70 > 100000hrs, @Ta 25°C									
Warranty		5 years in standard, 10 years optional									
Certification		ENEC,CE,CB,RoHS, For other certificates please request									
Product Size		470*230*79mm / 18.5*9.1*3.1 inches						25.4*9.4*5.4 inches / 646*240*137mm			
Carton Size		520*270*135mm / 20.5*10.6*5.3 inches						28.1*11.4*7.9 inches / 715*290*200mm			
Net Weight		3.1kg / 6.83 lbs						5.4kg / 11.90 lbs			
Gross Weight		4.0kg / 8.82 lbs						6.1kg / 13.45 lbs			
Recommend Installation Height		General 4-12m, based on actual project requirements									
Accessories(standard)		10KV SPD, Breather vent						Lid support, Circuit breaker, 10KV SPD, Breather vent			
Accessories(optional)		Photocell (with Nema socket)									
Application Field		Road & highway, urban road & street, residential area, parks, parking lot, riverside & jogging track									
Important Note!		**The provided information is solely for reference; the official measurement report holds higher authority.**									

Parameter Table

Electrical Data											
Model		**AOK-130WiL02**	**AOK-140WiL02**	**AOK-150WiL02**	**AOK-160WiL02**	**AOK-170WiL02**	**AOK-180WiL02**	**AOK-200WiL02**	**AOK-220WiL02**	**AOK-230WiL02**	**AOK-300WiL02**
Input Voltage		100-277VAC						100-277VAC			100-277VAC
THD（220Vac）		≤10%						≤10%			≤10%
PF(220Vac)		≥0.95						≥0.96			≥0.95
Driver		Inventronics / Sosen / Philips. Class 1/ Class 2, EU									
Operating Temperature		-40°C to 55°C (-40 °F to 131 °F)						-40°C to 50°C (-40 °F to 122 °F)			-40°C to 50°C (-40 °F to 122 °F)
Storage Temperature		-40°C to 80°C (-40 °F to 176 °F)									
Control Option		DALI, 1-10V/ PWM / timer dimming, Nema, Presence detection sensor. Dim-to-Off with standby power <= 0.5W.									
Surge Protection		10kV / 20kV optional									
Photometric Data											
Efficacy(lm/W) (CRI 70Ra, 5000K) (Std Dev ±5%)	T201-12in1 (85*150°)	135lm/W	130lm/W	128lm/W	145lm/W	143lm/W	141lm/W	137lm/W	141lm/W	139lm/W	132lm/W
	T211-12in1 (110*155°)	134lm/W	129lm/W	127lm/W	144lm/W	142lm/W	140lm/W	136lm/W	140lm/W	138lm/W	132lm/W
	T221-16in1 (75*150°)	143lm/W	141lm/W	139lm/W	152lm/W	150lm/W	148lm/W	145lm/W	148lm/W	146lm/W	140lm/W
	T301-12in1 (100*160°)	132lm/W	127lm/W	125lm/W	141lm/W	139lm/W	137lm/W	133lm/W	137lm/W	135lm/W	130lm/W
	T311-12in1 (90*150°)	134lm/W	129lm/W	127lm/W	144lm/W	142lm/W	140lm/W	136lm/W	140lm/W	138lm/W	131lm/W
	T321-16in1 (100*145°)	143lm/W	141lm/W	139lm/W	152lm/W	150lm/W	148lm/W	145lm/W	148lm/W	146lm/W	140lm/W
	T411-12in1 (115*145°)	134lm/W	129lm/W	127lm/W	144lm/W	142lm/W	140lm/W	136lm/W	140lm/W	138lm/W	132lm/W
	T2/T3/T5 @A5050	190lm/W	189lm/W	188lm/W	187lm/W	186lm/W	185lm/W	187lm/W	186lm/W	184lm/W	182lm/W
Luminous flux (lm) (CRI 70Ra, 5000K) (Std Dev ±5%)	T201-12in1 (85*150°)	17550lm	18200lm	19200lm	23200lm	24310lm	25380lm	27400lm	31020lm	31970lm	39600lm
	T211-12in1 (110*155°)	17420lm	18060lm	19050lm	23040lm	24140lm	25200lm	27200lm	30800lm	31740lm	39600lm
	T221-16in1 (75*150°)	18590lm	19740lm	20850lm	24320lm	25500lm	26640lm	29000lm	32560lm	33580lm	42000lm
	T301-12in1 (100*160°)	17160lm	17780lm	18750lm	22560lm	23630lm	24660lm	26600lm	30140lm	31050lm	39000lm
	T311-12in1 (90*150°)	17420lm	18060lm	19050lm	23040lm	24140lm	25200lm	27200lm	30800lm	31740lm	39300lm
	T321-16in1 (100*145°)	18590lm	19740lm	20850lm	24320lm	25500lm	26640lm	29000lm	32560lm	33580lm	42000lm
	T411-12in1 (115*145°)	17420lm	18060lm	19050lm	23040lm	24140lm	25200lm	27200lm	30800lm	31740lm	39600lm
	T2/T3/T5 @A5050	24700lm	26460lm	28200lm	29920lm	31620lm	33300lm	37400lm	40920lm	42320lm	54600lm
ULR		= 0%, @ Luminaire inclination 0°									
CCT		2700K, 3000K, 4000K, 5000K, 5700K, 6500K									
CRI		70Ra, 80Ra, 90Ra optional									
Beam Angle		Type-II (85*150°, 110*155°, 75*150°) / Type III (100*160°, 90*150°, 100*145°) / Type IV (115*145°)									
LED Manufacturer		LUMILEDS/Seoul/Others									
LED Model		Lumileds 3030, 5050 / Seoul 3030, 5050 / A5050									
Lens		Polycarbonate+tempered glass(4 mm thick)									
Mechanical Data											
IP/IK		IP66/IK08, according to standard EN 60529 and EN 62262									
Vibration Resistance		3G, conform to standard IEC 68-2-6.									
SCx		Front: 0.0263 m²; Side: 0.0363 m²						Front: 0.0285 m²; Side: 0.0412 m²			Front: 0.0291 m²; Side: 0.0433 m²
Materials		Heavy-duty die-cast aluminum (EN AC-46100)									
Painting		Black, Silver, Gray,Customized color									
Surface Treatment		Anti-UV thermosetting polyester / 80 micron epoxy primer + Anti-UV thermosetting polyester (for extremely corrosive environments).									
Cable		Pre-wired with a roughly 50 cm cable (Other lengths on request)									
Mounting		Side Entry/Post Top									
Others											
Lifespan		L70 > 100000hrs, @Ta 25°C									
Warranty		5 years in standard, 10 years optional									
Certification		ENEC,CE,CB,RoHS, For other certificates please request									
Product Size		676*290*137mm / 26.6*11.4*5.4 inches						756*308*138mm / 29.8*12.1*5.4 inches			756*308*138mm / 29.8*12.1*5.4 inches
Carton Size		745*340*200mm / 29.3*13.4*7.9 inches						825*360*200mm / 32.5*14.2*7.9 inches			825*360*200mm / 32.5*14.2*7.9 inches
Net Weight		6.0kg / 13.23 lbs						6.8kg / 14.99 lbs			8.2kg / 18.08 lbs
Gross Weight		7.2kg / 15.87 lbs						8.3kg / 18.30 lbs			9.7kg / 21.38 lbs
Recommend Installation Height		General 4-12m, based on actual project requirements									
Accessories(standard)		Lid support, Circuit breaker, 10KV SPD, Breather vent									
Accessories(optional)		Photocell (with Nema socket)									
Application Field		Road & highway, urban road & street, residential area, parks, parking lot, riverside & jogging track									
Important Note!		**The provided information is solely for reference; the official measurement report holds higher authority.**									

Ordering Information

AOK	-		-		-		-		-		-		-	
WATTS		**VOLTAGE**		**LED CHIPS**		**TYPE OF SENSOR**		**CCT&CRI**		**DISTRIBUTION**		**HOUSING**		**OPTION**
20WiL02(S)		NV=100-277V		L3=LUMILED 3030		00=Without Sensor		2770=2700K 70CRI		T201	(85*150°)	BK=Black		10KV SPD
30WiL02(S)				L5=LUMILED 5050		PH=Photocell		3070=3000K 70CRI		T211	(110*155°)	SL=Silver		20KV SPD
40WiL02(S)				S3=Seoul 3030		DV=Dimmable		4070=4000K 70CRI		T221	(75*150°)	GR=Gray		
50WiL02(S)				S5=Seoul 5050				5070=5000K 70CRI		T301	(100*160°)	Custom request		
60WiL02(S)				A5=A5050				5770=5700K 70CRI		T311	(90*150°)			
70WiL02(S)								6570=6500K 70CRI		T321	(100*145°)			
80WiL02								2780=2700K 80CRI		T411	(115*145°)			
90WiL02								3080=3000K 80CRI						
100WiL02								4080=4000K 80CRI						
120WiL02								5080=5000K 80CRI						
130WiL02								5780=5700K 80CRI						
140WiL02								6580=6500K 80CRI						
150WiL02														
160WiL02														
170WiL02														
180WiL02														
200WiL02														
220WiL02														
230WiL02														
300WiL02														

Photometry

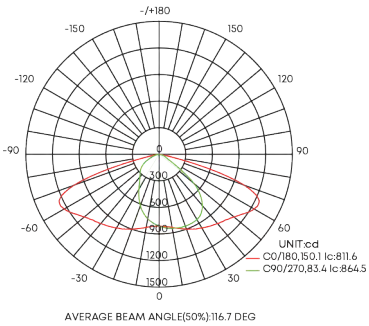

T201 (85*150°)

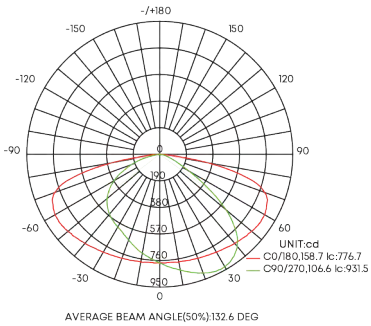

T211 (110*155°)

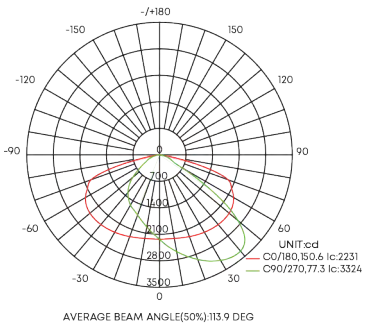

T221 (75*150°)

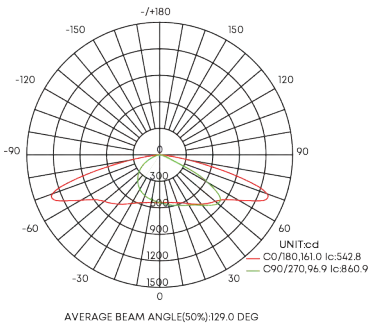

T301 (100*160°)

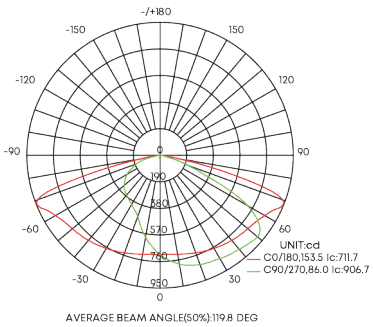

T311 (90*150°)

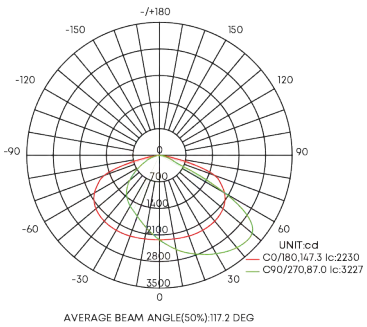

T321 (100*145°)

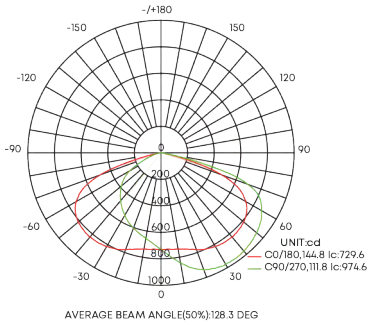

T411 (115*145°)

Illuminance Diagram

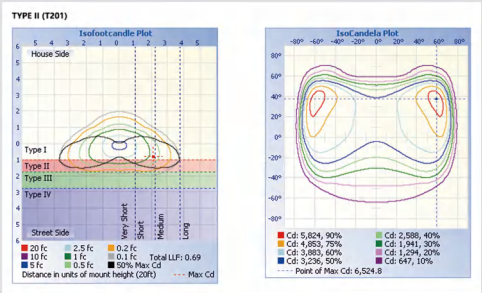

T201 (85*150°)

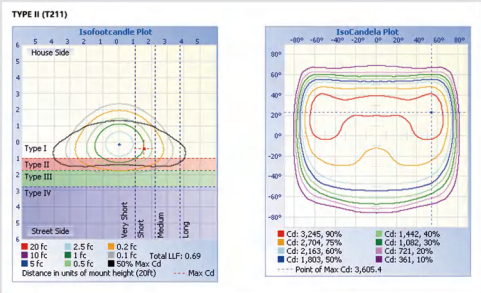

T211 (110*155°)

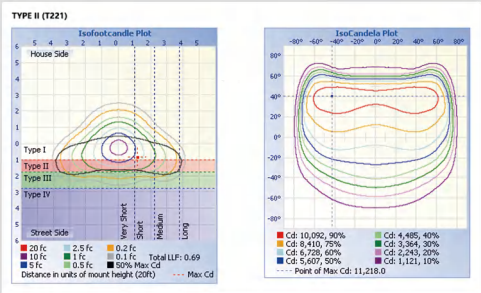

T221 (75*150°)

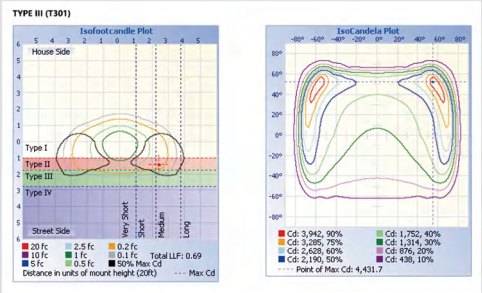

T301 (100*160°)

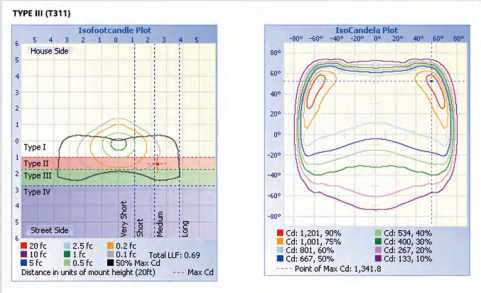

T311 (90*150°)

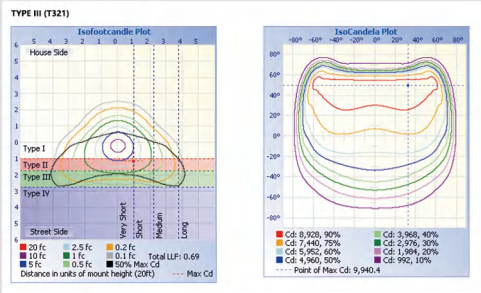

T321 (100*145°)

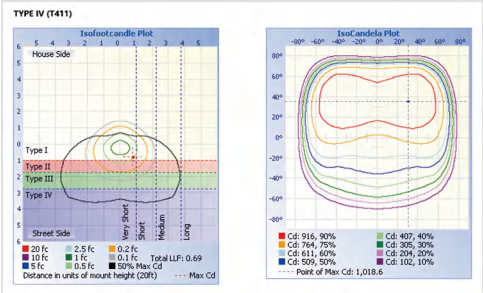

T411 (115*145°)

Accessories

Mounting Options

Post Top

Side Entry

Control Options

Photocell

Shorting Cap

3 Pin/7 Pin Receptacle

ZIGBEE

LoRa™

DALI CONTROL

Internet GPRS NB-IOT

*As the products are upgraded, the accessories may differ from those described in the pictures. Please consult with our sales team for updated details and order separately.

Fixture Dimensions

IL02S (20W-70W)

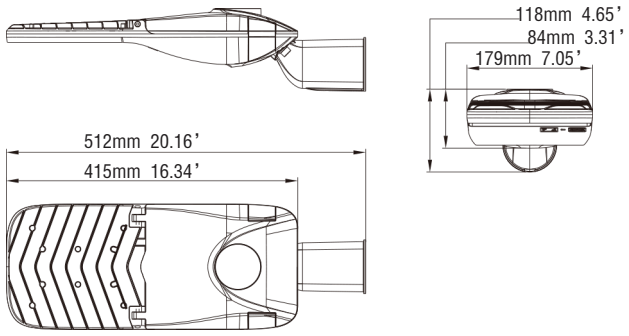

(20W-70W)

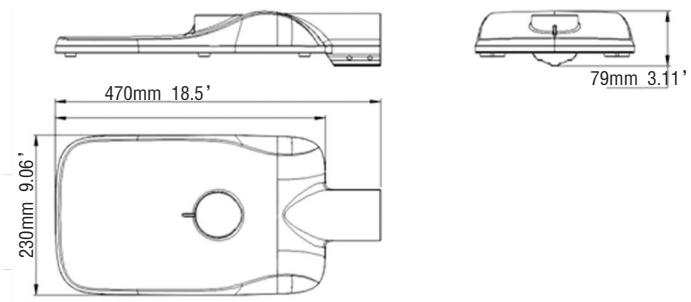

(80W-120W)

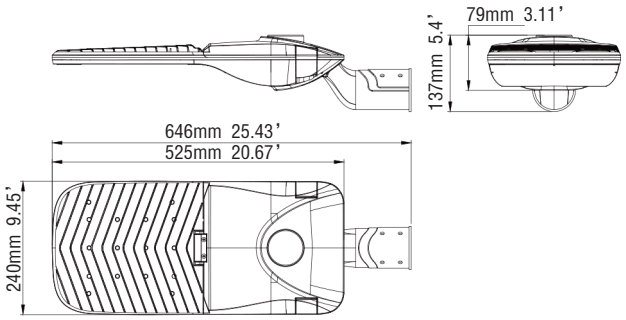

(130W-180W)

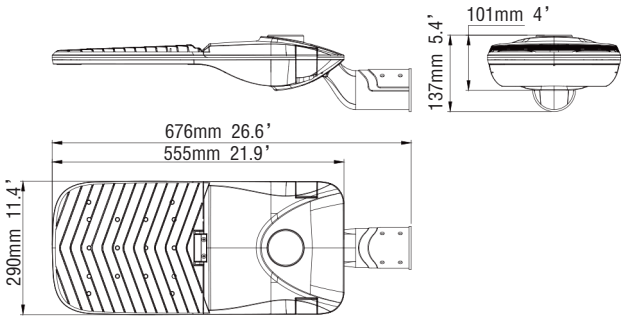

(200W-230W)

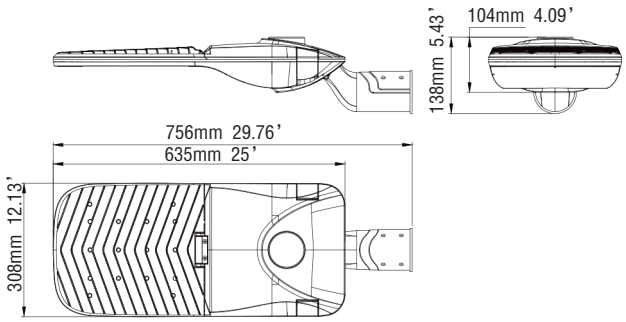

(300W)

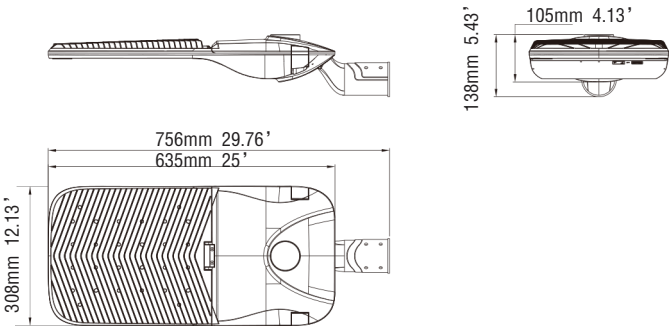

Quality, Honesty, Service and Innovation

Innovative & Tailored Lighting Solutions for **Success**

WARRANTY

5 Year Limited Warranty,
10 Year Preferred Warranty.
Please consult with our sales for detailed agreement.

wally@aokledlight.com
www.aokledlight.com
+1 626-986-4050 (US)
+86 755 2357 9148 (CN)

Manufacturing:
Shenzhen:
Building 1 & 4, St. George's Science and Technology Industrial Park, Shajing Street, Shenzhen, China, 518124.
Huizhou:
Building 2, Yinghui Electronic Science and Tech Park, No. 6 Dongsheng North Rd, Chenjiang Street, Zhongkai High-tech Zone, Huizhou, China. 516006.
Philippines:
Binan City, Laguna, Philippines.

Fuzhou Office:
Room 301, Yujing Business Center Zone 1, No. 12 Baihuazhou road, Cangshan district, Fuzhou, China, 350007

Copyright @2026 AOK Industrial Company Limited. All Right Reserved.