Parameter Table

Electrical Data

Model		AOK-315WiNS	AOK-380WiNS	AOK-460WiNS	AOK-580WiNS	AOK-720WiNS
Power(W)		315	380	460	580	720
Input voltage		100-277VAC, 50/60Hz, 347/480VAC optional				
THD		< 20%				
PF		> 0.90				
Control Option		DALI, 1-10V/PWM/Timer dimming, Nema, Zhaga/Presence detection sensor.				
UGR		<19				
Operating temperature		-40°C to 50°C (-40 °F to 122 °F)				
Driver brand		Meanwell/Inventronics				
Surge Protection		10kV/20kV optional				
Photometric Data						
Efficacy(lm/w) (CRI 70Ra, 5000K)	15D	144.4	142.5	143.5	141.6	139.5
	30D	153.0	149.5	151.0	148.5	146.0
	60D	152.4	148.4	153.0	150.0	147.9
Luminous flux (lm)	15D	45500	54150	66000	82100	100450
	30D	48200	56800	69450	86130	105100
	60D	48000	56400	70400	87000	106500
ULOR		= 0%, @ Luminaire inclination 0°				
CCT		3000K, 4000K, 5000K, 5700K, 6500K				
CRI		Ra70, Ra80, Ra90				
Beam angle		15D/30D/60D				
LED Manufacturer		LUMILEDS				
LED model		Lumileds 5050				
Working current of single LED (Standard product)	15D	75mA	90mA	66mA	85mA	105mA
	30D	47mA	56mA	39mA	50mA	63mA
	60D	47mA	56mA	39mA	50mA	63mA
Lens		Polycarbonate, modular design				
Lifespan		L90B10 - 52 000 h, @Tq 25°C				
Mechanical Data						
IP/IK		IP66/IK10, according to standard EN 60529 and EN 62262				
Vibration resistance		3G, conform to standard IEC 68-2-6.				
SCx(EPA, Fixture body)		Front: 0.204386㎡(2.2ft²) Side: 0.115943㎡(1.248ft²)		Front: 0.285212㎡(3.07ft²) Side: 0.132665㎡(1.428ft²)		
Housing/Materials		Heavy-duty die-cast aluminum (EN AC-46100)				
Surface treatment		Anti-UV thermosetting polyester/80 micron epoxy primer, Anti-UV thermosetting polyester (for extremely corrosive environments).				
Painting		Black, Silver gray, Custom request				
Cable		Pre-wired with a 30 cm cable (Other lengths on request)				
Mounting		TYPE A/TYEP B/TYPE C/TYPE D				
Others						
Warranty		5 years (Warranty extension up to 10 years on request)				
Certification		UL/cUL/DLC/SAA/CE/FCC/ENEC/TUV				
Product size	TYPE-A	ϕ468*343mm			ϕ550*336mm	
	TYPE-B	ϕ468*559*407mm			ϕ550*602*315mm	
Net weight	TYPE-A	10.3kg	10.3kg	16.08kg	16.08kg	16.08kg
	TYPE-B	16.5kg	16.5kg	23.2kg	23.2kg	23.2kg
TYPE-A		540*540*415mm			640*640*435mm	
TYPE-B		550*555*410mm			640*640*435mm	
TYPE-A		13.27kg	13.27kg	19.68kg	19.68kg	19.68kg
TYPE-B		19.5kg	19.5kg	26.8kg	26.8kg	26.8kg
Application field		Suitable for stadium, sports field, port, railway station				

- The INS series LED Stadium Light is designed for exterior sports lighting , a superior high output, high efficiency LED flood light, featuring a unique optical design that virtually eliminates glare with minimal impact on performance. It is available in a variety of flood distributions for lighting applications such as large areas, port and rail centers, exterior sports etc.

Construction

- Heavy duty die-cast aluminum housing.
- Driver compartment separated from the light fixture, reduced on the gross weight.
- Light engine is thermally isolated from the driver compartment.
- UV stabilized polyester powder paint finish.

Optical/Electric

- Three light distributions to maximize performance: 15 ° , 30°, 60°.
- Working temperature: -40°C to 50°C (-40°F to 122°F); INS-B: -40°C to 40°C(-40°F to 104°F).
- 1-10V dimming driver device standard.
- Vottage option: 100-277VAC, 50/60HZ standard; 347V-480V, 50/60Hz optional.

Finish

- Rugged, weather-tight design and 3G Vibration ratings ensure durability even in harsh environments.

Ordering Information

AOK	-		-		-		-		-		-	
WATTS		VOLTAGE		LED CHIPS		TYPE OF SENSOR		CCT&CRI		DISTRIBUTION		MOUNT		HOUSING
315W iNS		NV=100-277V		L5=Lumileds5050		00=Without Sensor		3070=3000K 70CRI		15d=15°		A=Top Fixed		BK=Black
380W iNS		HV=347/480V		V2=Lumileds V2		DV=Dimmable		3080=3000K 80CRI		30d=30°		B=With driver box		SL=Silver Gray
460W iNS						PH=Photocell		4070=4000K 70CRI		60d=60°		C=Split mode		
580W iNS								4080=4000K 80CRI				D=Yoke Mount		
720W iNS								5070=5000K 70CRI						
								5080=5000K 80CRI				**Accessories**		
								5770=5700K 70CRI				SPD 10kV, 20kV optional		
								5780=5700K 80CRI				Light visor		
												Laser sight		

Photometrics

15D

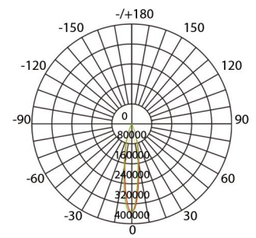

AVERAGE BEAM ANGLE(50%):18.2DEG
UNIT:cd

C0/180 Ic:353054 C90/270 Ic:354895
9.2,9.1 10.0,8.2

30D

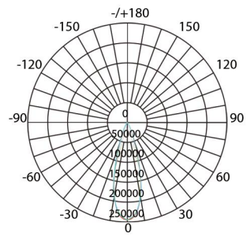

AVERAGE BEAM ANGLE(50%):29.8 DEG
UNIT:cd

C0/180,29.5deg C60/240,29.9deg
C30/210,29.6deg C90/270,30.1deg

60D

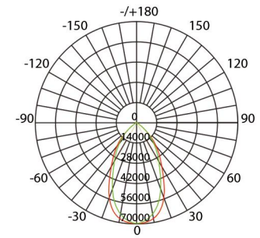

AVERAGE BEAM ANGLE(50%):57.4 DEG
UNIT:cd

C0/180 Ic:69654 C90/270 Ic:69607
30.1,30.1 27.3,27.3

INS Series Specification Sheet

*Due to the constant improvements in product development, individual parameters might change. Please refer to our sales or R&D team for most up-to-date content as specifications are subject to change without notice.

wally@aokledlight.com
+1 626-986-4050 (US)
+86 755 2357 9148 (CN)
@2021 AOK LED LIGHT CO., LTD. All Right Reserved.

AOK® Quality, Honesty, Service and Innovation

Dimensions

INS-A

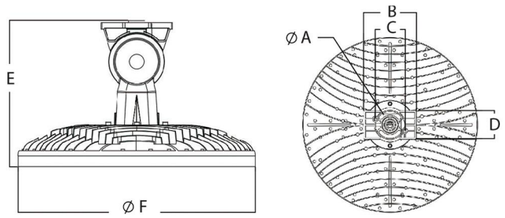

315W-380W

A	B	C
7.3cm(2.9")	16 .5cm(6.5")	9.3cm(3.6")
D	**E**	**F**
9.0cm(3.5")	34.3cm(13 .4")	46.8cm(18 .3")

460W-720W

A	B	C
7.3cm(2.9")	7.3cm(2.9")	9.3cm(3.6")
D	**E**	**F**
9.0cm(3.5")	33.6cm(13 .2")	55.0cm(21 .6")

INS-B

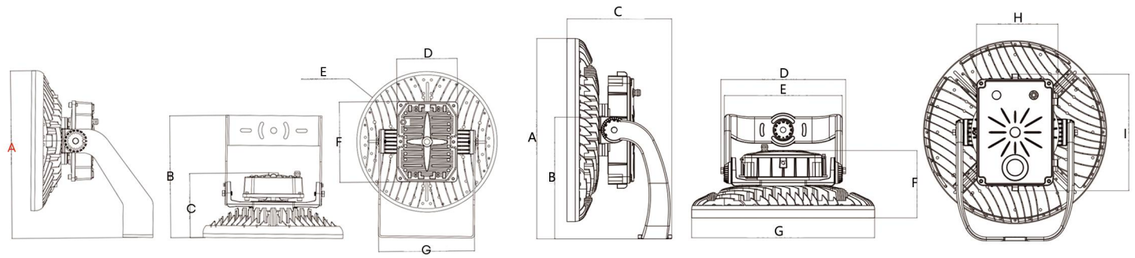

315W-380W

A	B	C	D
55.96cm(22.0")	40.68cm(16 .0")	21 .4cm(8.4")	20.3cm(8")
E	**F**	**G**	
46.8cm(18 .4")	26.8cm(10 .5")	32.01 cm(12 .6")	

460W-720W

A	B	C	D	E
60.2cm(23.7")	36.6cm(14 .4")	31 .48 cm(12 .4")	37.5cm(14 .7")	35.4cm(13 .9")
F	**G**	**H**	**I**	
20.25 cm(8.0")	55.0cm(16 ")	24.5cm(9.6")	35.1 cm(13 .8")	

Accessories

Bracket Options

INS-A
Top Fixed Installation

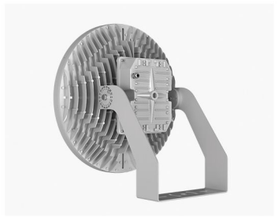

INS-B
Under Mount Yoke (with driver box)

INS-C
Under Mount Yoke (split mode)

INS-D
Yoke Mount

Photocell

Steel rope

Laser sight

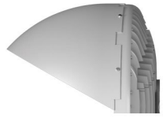

Visor

Timing control

Zhaga

DALI CONTROL

*As the products are upgraded, the accessories may differ from those described in the pictures. Please consult with our sales team for updated details and order separately.

Recommended Installation

INS-A

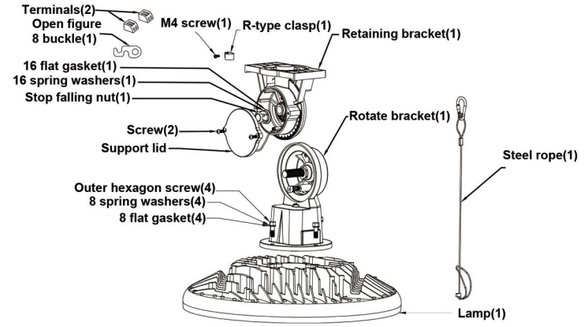

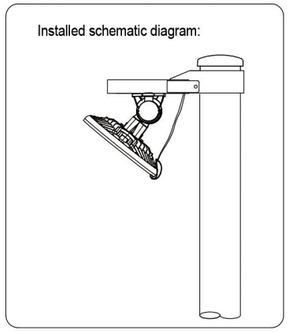

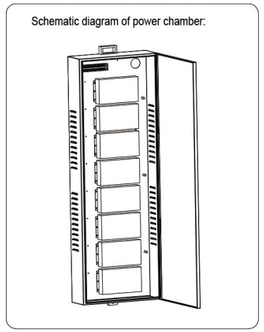

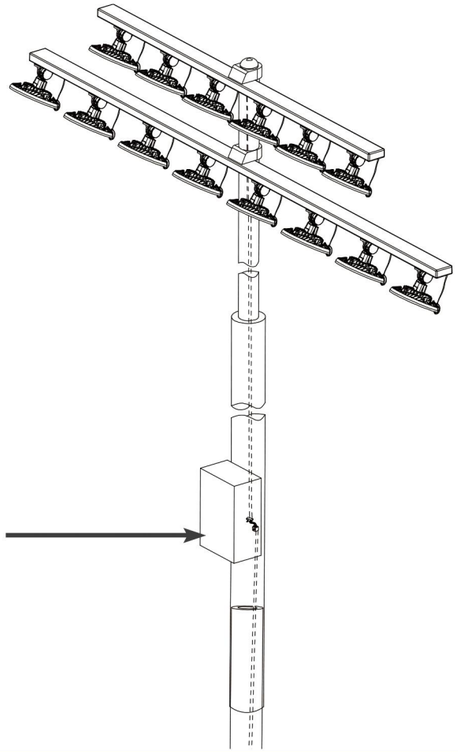

INS-B

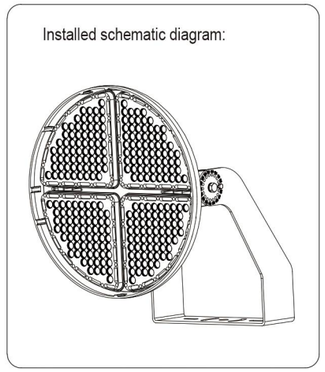

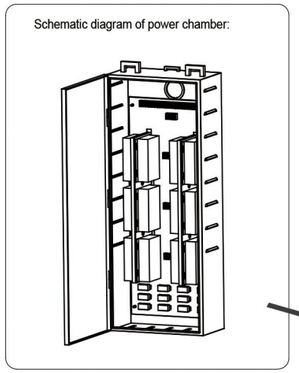

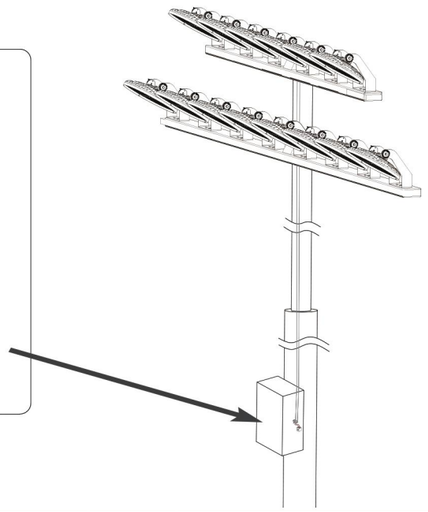

INS Series Specification Sheet

*Due to the constant improvements in product development, individual parameters might change. Please refer to our sales or R&D team for most up-to-date content as specifications are subject to change without notice.

wally@aokledlight.com
+1 626-986-4050 (US)
+86 755 2357 9148 (CN)
@2021 AOK LED LIGHT CO., LTD. All Right Reserved.

AOK® Quality, Honesty, Service and Innovation